ESPOO QUICK GUIDE.

For further information see manual.

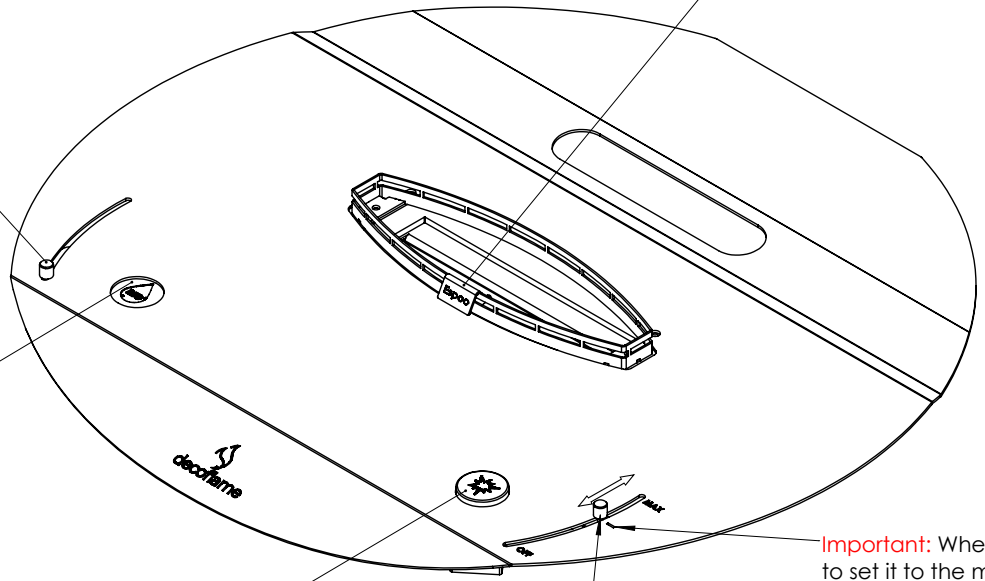

Place the Espoo plate here in the center

Handle for opening and closing the filling lid

Use the supplied filling pump

IMPORTANT bioethanol filling.
Step 1. place quick coupling
Step 2. place power plug

Place the power button here

Important: When adjusting the flame on your Espoo fireplace, ensure to set it to the marked '1/3' level as a minimum. It is crucial that you do not adjust the flame lower than this point to reduce the flame size, as it can affect the fireplace's functionality and safety.

IMPORTANT: when extinguishing the fire.
Step1. the adjustment lever is set to 1/3 position between "MAX" and "OFF"
Step 2. wait 1 minute then turn off the fire by moving the adjustment lever to the "OFF position"

Decoflame ApS | Vang Mark 2 | 9380 Vestbjerg, DK | +45 9630 4800 | bestilling@decoflame.dk | decoflame.dk
Facebook: Decoflame | Instagram: @decoflame.dk

decoflame